HYBRID FIRE

MatriX | 1050/650 II

Specifications

Exterior dimensions WxHxD in mm
1242 x 1173 x 574

Fire display WxHxD in mm
1087 x 650 x 383

System
Log Burner 3.0

Decoration
Log set

Back walls
Back wall smooth steel

Remote
Via app and ITC Remote

Power
10,1 kW

Operating system
Honeywell

Energy label
B

Options (at a surcharge)
Inset depth 30 mm
Inset depth 100 mm
HPL Module
Black glass back wal
Non-reflective glass
Adjustable feet
Wall bracket

DECORATION OPTIONS

Heating functionality
Nee

Flue material
130/200

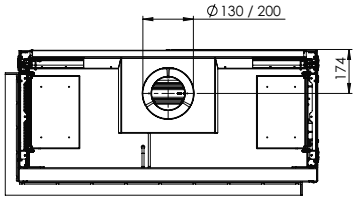

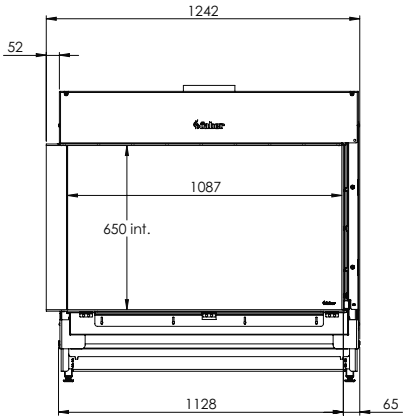

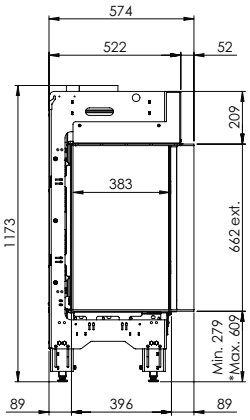

* Incl. optional adjustable feet

There is **so much to tell...**